BATHS OF DISTINCTION

Manufacturer of Exclusive Whirlpool Clawfoot Tubs

SANSIRO

SS73W SanSiro Slipper Claw Foot Whirlpool Tub

Dimensions	Specifications	Features
Outside: 73” x 35.5” x 31.5” high	Empty Weight: 170 lbs	Twin Skin Construction
Inside: 64” x 29” x 25.5” high	Weight Full to Overflow: 761 lbs	Reinforced Tub Floor
Tub Floor: 46” x 22”	Gallons to Overflow: 71	Hidden Pump and Jets
Depth to Overflow: 13.5”	Electrical: 110v – 15 amp (pump)	Slip Resistant Floor
	Pump: Self Draining 1.5HP Ultra Quiet	Nine Total Water Jets
	UL Listed	Easy Clean Gloss Acrylic Finish

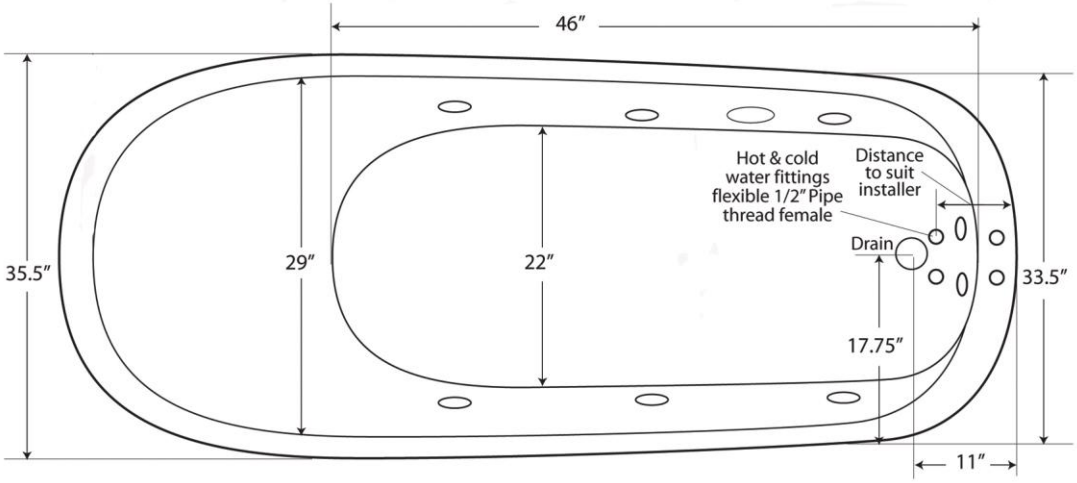

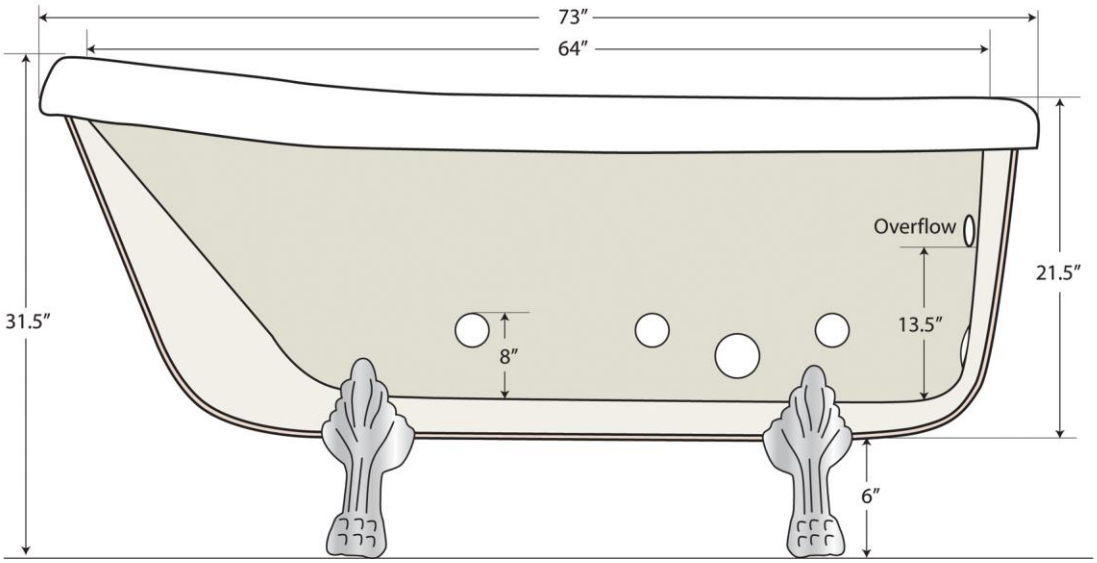

USA: 1-866-938-3880 • (727) 527-9896 • www.bathsofdistinction.com
Baths of Distinction Inc., 5843 Carrier Street, St. Petersburg, FL 33714 USA