BATHS OF DISTINCTION

Manufacturer of Exclusive Whirlpool Clawfoot Tubs

CLASSIQUE

CLPD73 Classique Double End EXTRA DEEP Pedestal Soak Tub

Dimensions	Weights	Features
Outside: 73” x 31.9” x 28.7” high	Empty Tub: 150 lbs	Extra Deep Soaker
Inside: 66.5” x 25.6” x 24.4” high	Weight Full to Overflow: 961 lbs	Minimum ½” Tub Wall Thickness
Tub Floor: 45.3” x 19.7”	Gallons to Overflow: 98	Reinforced Extra Thick Tub Floor
Depth to Overflow: 18.1”		High Gloss Easy Clean Finish
Overflow Hole Dia.: 2.2”		5mm Acrylic Finish Inner & Outer
Drain Hole Dia.: 2.2”		Slip Resistant Floor

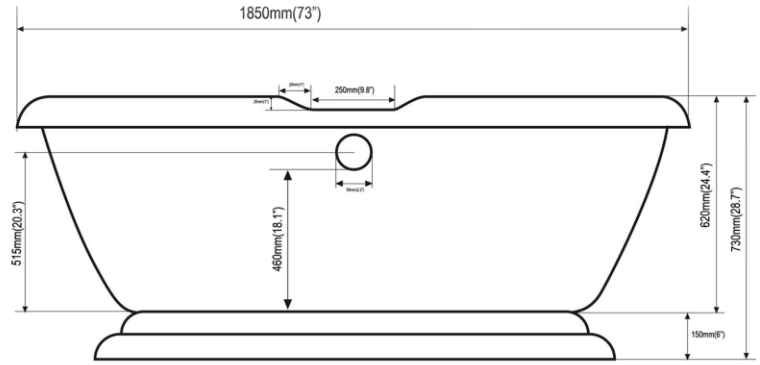

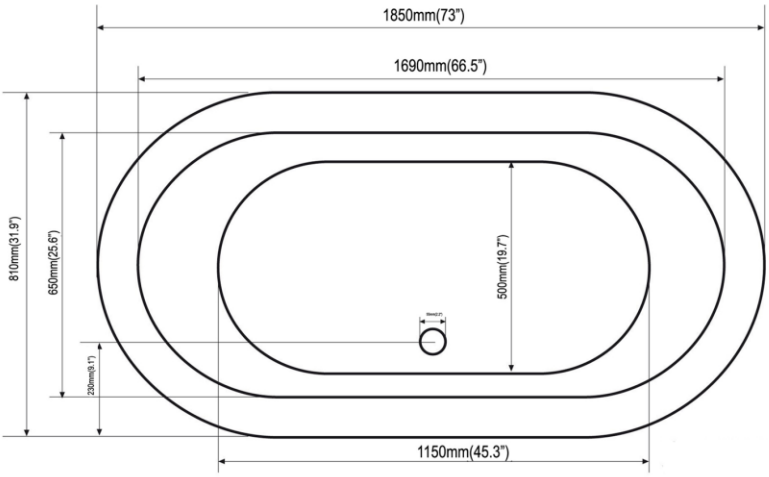

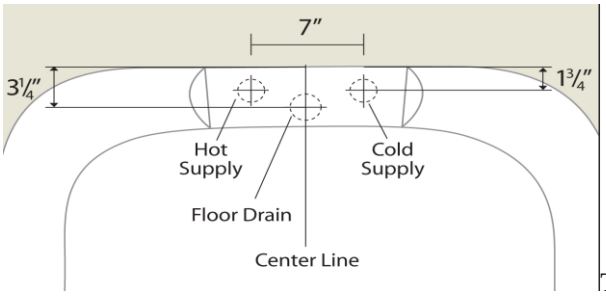

Typical rough – in for 7” faucet spread

USA: 1-866-938.3880 • (727) 527-9896 • www.bathsofdistinction.com
Baths of Distinction Inc., 5843 Carrier Street, St. Petersburg, FL 33714 USA