BATHS OF DISTINCTION
Manufacturer of Exclusive Whirlpool Clawfoot Tubs

CLASSIQUE HOTEL COLLECTION

CLFL-53 Classique Classic Claw Foot Soak Tub

Dimensions	Weights	Features
Outside: 53” x 30” x 26” high	Empty Tub: 111 lbs	Minimum 1/2” Tub Wall Thickness
Inside: 47” x 23” x 18.9” high	Weight Full to Overflow: 442 lbs	Reinforced Extra Thick Tub Floor
Tub Floor: 34” long x 18” wide	Gallons to Overflow: 41	High Gloss Acrylic Finish
Depth to Overflow: 13.6”		Integrated Heat Barrier
Overflow Hole Dia.: 2.2”		Slip Resistant Tub Floor
Drain Hole Dia.: 2.2”		Easy Clean Acrylic Surface

Meets or exceeds ANSI Z124.1.2-2005; CSA B45.0-02 & CSA B45.5-02

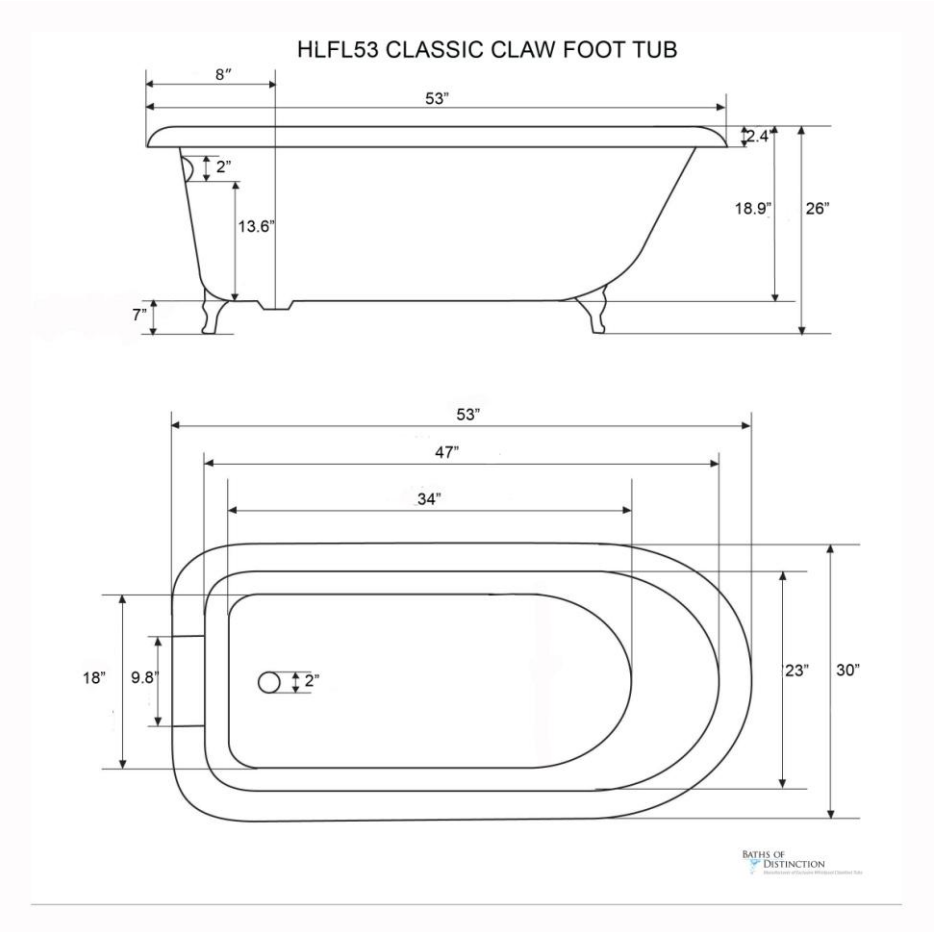

Classique Soaking Tubs

Typical 7” Deck Mount Faucet With Regular Drain

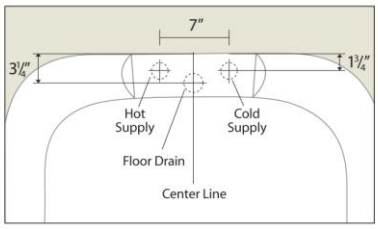

Measurements to be used for rough-in plumbing only

USA: 1-866-938-3880 • (727) 527-9896 • www.bathsofdistinction.com
Baths of Distinction Inc., 5843 Carrier Street, St. Petersburg, FL 33714 USA