BATHS OF DISTINCTION

Manufacturer of Exclusive Whirlpool Clawfoot Tubs

CLASSIQUE

CLDSPD67 Classique Double Slipper Pedestal Soak Tub

Dimensions	Weights	Features
Outside: 67" x 31.5" x 31.5" h	Empty Tub: 129 lbs	Minimum ½" Tub Wall Thickness
Inside: 60.5" x 25.25" x 25.5" h	Weight Full to Overflow: 665 lbs	Reinforced Extra Thick Tub Floor
Tub Floor: 39.5" x 19.3"	Gallons to Overflow: 65	High Gloss Acrylic Finish
Depth to Overflow: 13.8"		5mm Acrylic Finish Inner & Outer
Overflow Hole Dia.: 2.2"		Easy Clean Acrylic Finish
Drain Hole Dia.: 2.2"		Slip Resistant Floor

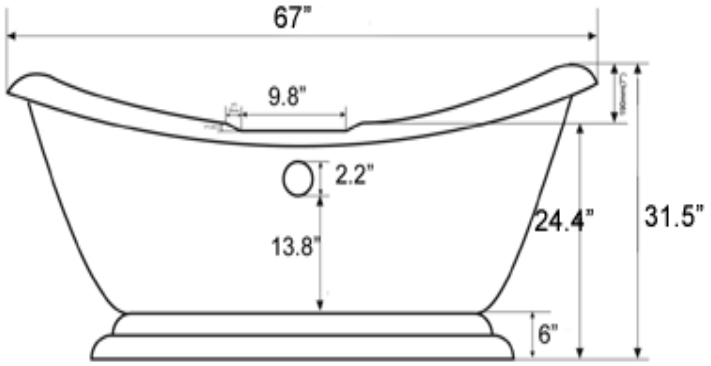

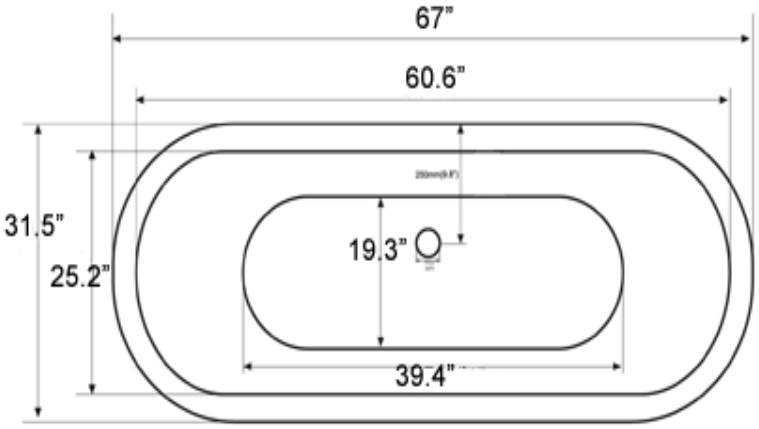

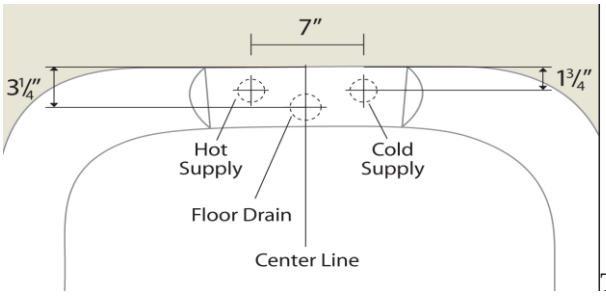

Typical rough – in for 7" faucet spread

USA: 1-866-938.3880 • (727) 527-9896 • www.bathsofdistinction.com
Baths of Distinction Inc., 5843 Carrier Street, St. Petersburg, FL 33714 USA