BATHS OF DISTINCTION

Manufacturer of Exclusive Whirlpool Clawfoot Tubs

CLASSIQUE

CLDSPD59 Classique Double Slipper Pedestal Soak Tub

Dimensions	Weights	Features
Outside: 59" x 30.75" x 30.5" h	Empty Tub: 103 lbs	Minimum ½" Tub Wall Thickness
Inside: 52.8" x 24.5" x 25.5" h	Weight Full to Overflow: 555 lbs	Reinforced Extra Thick Tub Floor
Tub Floor: 35.4" x 18.9"	Gallons to Overflow: 56	High Gloss Acrylic Finish
Depth to Overflow: 13.8"		5mm Acrylic Finish Inner & Outer
Overflow Hole Dia.: 2.2"		Easy Clean Acrylic Finish
Drain Hole Dia.: 2.2"		Slip Resistant Floor

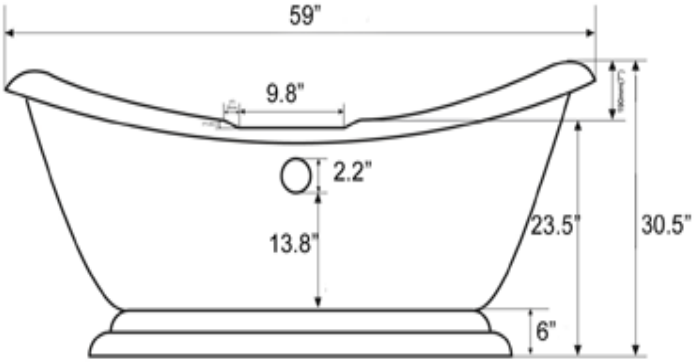

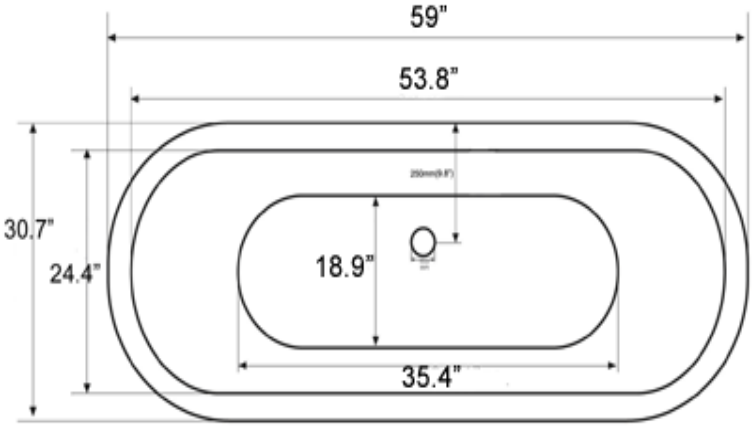

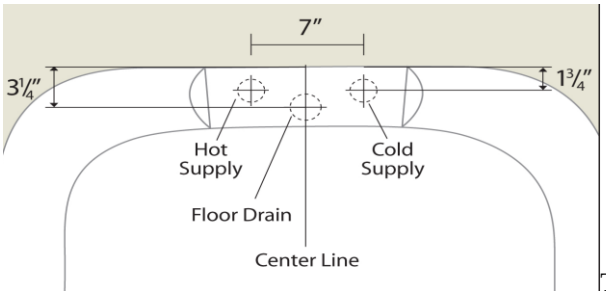

Typical rough – in for 7" faucet spread

USA: 1-866-938.3880 • (727) 527-9896 • www.bathsofdistinction.com
Baths of Distinction Inc., 5843 Carrier Street, St. Petersburg, FL 33714 USA