BATHS OF DISTINCTION
Manufacturer of Exclusive Whirlpool Clawfoot Tubs

CLASSIQUE HOTEL COLLECTION

CLBT-67 Classique Bateau Style Claw Foot Soak Tub

Dimensions	Weights	Features
Outside: 67” x 28.7” x 27.6” high	Empty Tub: 128 lbs	Minimum 1/2” Tub Wall Thickness
Inside: 63.4” x 25.2” x 19.2” high	Weight Full to Overflow: 783 lbs	Reinforced Extra Thick Tub Floor
Tub Floor: 48.8” long x 17.7” wide	Gallons to Overflow: 78	High Gloss Acrylic Finish
Depth to Overflow: 16.3”		Integrated Heat Barrier
Overflow Hole Dia.: 2.2”		Slip Resistant Tub Floor
Drain Hole Dia.: 2.2”		Easy Clean Acrylic Surface

Meets or exceeds ANSI Z124.1.2-2005; CSA B45.0-02 & CSA B45.5-02

Must use wall mount or over tub supply lines – NOT SUITABLE for Deck Mounted faucet

HLBT67 BATEAU STYLE CLAWFOOT TUB

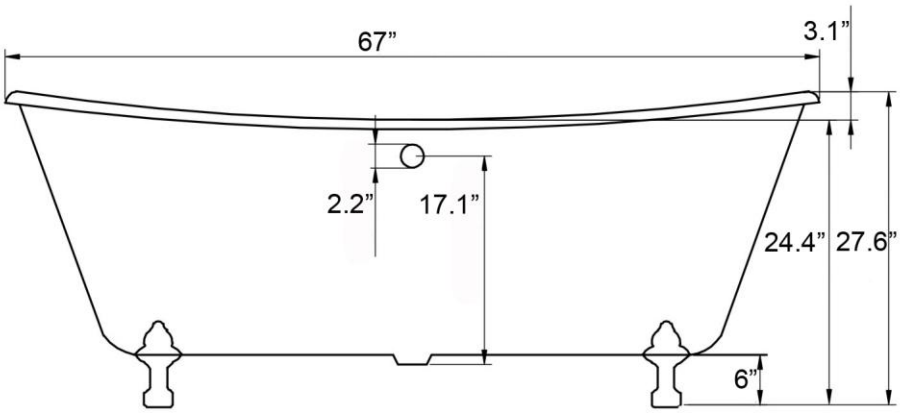

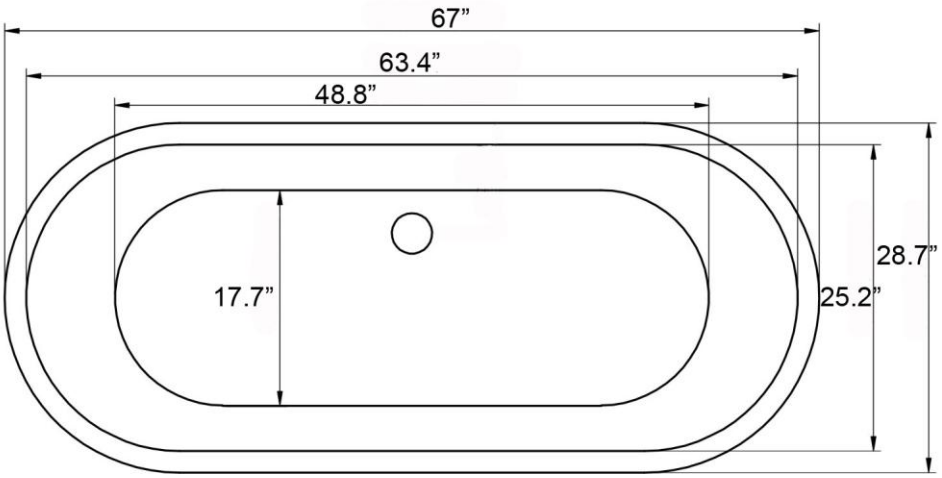

USA: 1-866-938-3880 • (727) 527-9896 • www.bathsofdistinction.com
Baths of Distinction Inc., 5843 Carrier Street, St. Petersburg, FL 33714 USA